Mitsubishi Electric AC Servo System Sales and Service

No.26-34E

1-phase 200 V AC Input Support and Addition of Branch Circuit Protection Device to Comply with UL 61800-5-1 Standard for Simple Converter MR-CM3K

Thank you for your continued patronage of the Mitsubishi Electric AC servo system.
We have added a specification for 1-phase 200 V AC to 240 V AC input to the main circuit power supply input of the simple converter MR-CM3K. Thus, even in regions with a 3-phase 400 V AC power supply, such as Europe, the 200 V AC-compatible servo amplifier can be operated using a 1-phase 200 V AC power supply. This helps reduce system size and standardize equipment with that designed for regions with a 3-phase 200 V AC power supply.

1. Target Model

Simple converter MR-CM3K

2. Reason for the Change

To enable the use of a 1-phase 200 V AC power supply even in regions with a 3-phase 400 V AC power supply, such as Europe, thereby increasing customers' equipment design flexibility and expanding their options for equipment selection.

3. Details of the Change

(1) 1-phase 200 V AC input support

The simple converter MR-CM3K main circuit power supply input will now support 1-phase 200 V AC in addition to the 3-phase 200 V AC input. Accordingly, the rating plate indications will be changed as shown in Table 1.

Table 1. Changes in the rating plate

	Before	After
Main circuit power supply input	3-phase 200 V AC to 240 V AC	3-phase or 1-phase 200 V AC to 240 V AC
Rating plate indication	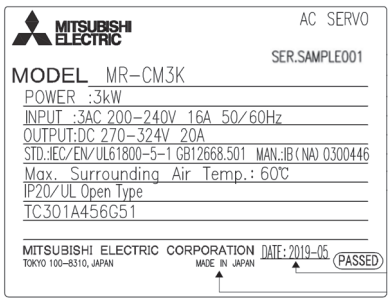	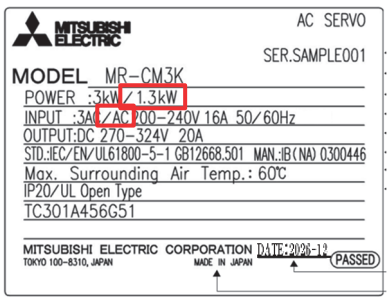

The changes when using 1-phase 200 V AC input are shown in Table 2 on the next page.

Date of issue	November 2026	Title	1-phase 200 V AC Input Support and Addition of Branch Circuit Protection Device to Comply with UL 61800-5-1 Standard for Simple Converter MR-CM3K	Mitsubishi Electric Corp., Nagoya Works 1-14, Yada-minami 5-chome, Higashi-ku, Nagoya 461-8670 Tel.: +81 (52) 721-2111 Main line

Table 2. Changes for 1-phase 200 V AC input

		3-phase input	1-phase input
Main circuit power supply input	Voltage/ frequency	3-phase 200 V AC to 240 V AC, 50 Hz/60 Hz	1-phase 200 V AC to 240 V, 50 Hz/60 Hz
	Permissible voltage fluctuation	3-phase 170 V AC to 264 V AC	1-phase 170 V AC to 264 V AC
Compatible servo amplifier		MR-J5-10_ to MR-J5-200_, MR-J5W2-22_ to MR-J5W2-1010_, MR-J5W3-222_, MR-J5W3-444_	MR-J5-10_ to MR-J5-100_, MR-J5W2-22_ to MR-J5W2-44_, MR-J5W3-222_, MR-J5W3-444_
Total capacity of connectable servo amplifiers		3 kW	1.3 kW
Continuous rating		3 kW	1.3 kW
Instantaneous maximum rating		9 kW	3.9 kW
Restrictions on close mounting		Not restricted	The ambient temperature within 0 °C to 45 °C, or 75 % or less of the effective load ratio (*2)
Configuration example (*1)		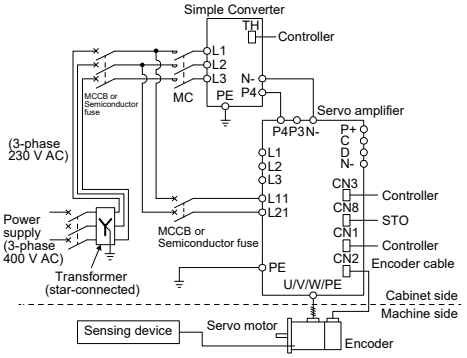	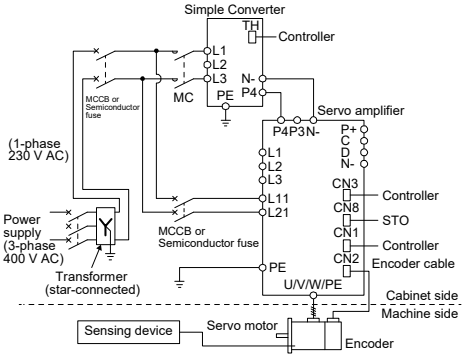

*1 Connect the main circuit power supply input to L1 and L3 of CNP1.

*2 The effective load ratio of the simple converter:

Total of (rated output of each servo amplifier x effective load ratio) ÷ 1.3 kW (continuous rating)

Calculation example)

When the following three servo amplifiers are connected:

MR-J5-100_: effective load ratio of 70 %

MR-J5-20_: effective load ratio of 70 %

MR-J5-10_: effective load ratio of 100 %

The effective load ratio of the simple converter is calculated as follows:

(1 kW × 0.7 + 0.2 kW × 0.7 + 0.1 kW × 1.0)/1.3 kW = 72.3 %

Therefore, the units can be mounted closely.

(2) Addition of branch circuit protection device to comply with UL 61800-5-1 standard

For the branch circuit protection devices compliant with the UL 61800-5-1 standard for the MR-CM3K, we have added SCCR 14 [kA] to the molded-case circuit breakers (UL 489 Listed MCCB) listed in Table 3, and certification has been obtained.

Table 3. Changes in the branch circuit protection device

	Before	After
Molded-case circuit breaker SCCR	50 kA	14 kA or 50 kA

For a selection example, refer to Table 4. For details, refer to the instruction manual "MR-CM3K Simple Converter Safety Instructions and Precautions for AC Servos".

Table 4. Selection example of MCCB and fuse

Simple converter (200 V)	Servo amplifier total capacity	Molded-case circuit breaker (240 V AC)		Semiconductor fuse (700 V) SCCR 100 kA
		Rated current [A]	SCCR [kA]	
MR-CM3K	Less than 2 kW	15	14 or 50 (*1)	170M1409 (16 A)
	2 kW or over	20		170M1413 (40 A)

*1 When selecting from Mitsubishi Electric molded-case circuit breakers, use NF125-SVU (50 kA) or NF50-SVFU (14 kA).

4. Schedule

This change will be made sequentially from the December 2026 production.
There may be cases where both the former and new products exist in the distribution stage.